education

Department:
Education
REPUBLIC OF SOUTH AFRICA

NATIONAL SENIOR CERTIFICATE

GRADE 12

CIVIL TECHNOLOGY

NOVEMBER 2008

MARKS: 200

TIME: 3 hours

This question paper consists of 13 pages, 6 answer sheets and a formula sheet.

Copyright reserved

REQUIREMENTS

1. Answer book
2. Drawing instruments
3. A non-programmable pocket calculator

INSTRUCTIONS AND INFORMATION

1. This question paper consists of SIX questions.
2. ALL questions are COMPULSORY.
3. Answer each question as a whole – do NOT separate sub-questions.
4. Start EACH question on a NEW page.
5. Sketches may be used to illustrate your answers.
6. ALL calculations and written answers must be done in the ANSWER BOOK.
7. Use the mark scheme as a guide to the length of your answer.
8. Drawings and sketches where applicable must be fully dimensioned and neatly finished off with descriptive titles and notes to conform to the SANS/SABS Recommended Practice for Building Drawings.
9. For the purpose of this question paper, the size of a brick should be taken as 220 mm x 110 mm x 75 mm.
10. Use your discretion where dimensions and/or details have been omitted.
11. Non-programmable pocket calculators may be used.
12. Answer QUESTIONS 4.8, 5.2.1, 5.2.2, 6.1, 6.2 and 6.3 on the ANSWER SHEETS provided, using drawing instruments where necessary.
13. Write your examination number on the ANSWER SHEETS and hand them in with your ANSWER BOOK. (Put ALL answer sheets inside your ANSWER BOOK).

Copyright reserved

QUESTION 1: CONSTRUCTION PROCESSES

1.1 Identify the roof truss illustrated below.

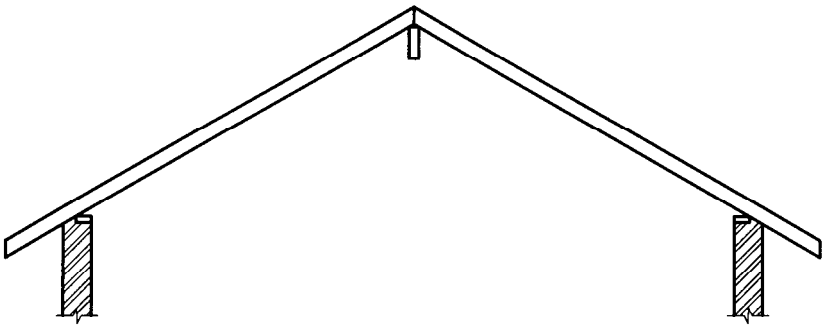

FIGURE 1.1 (2)

1.2 The figure below represents a South African (Howe) roof truss. Write down the letters A – E and next to the letter the correct name of each member of the roof truss in THE ANSWER BOOK.

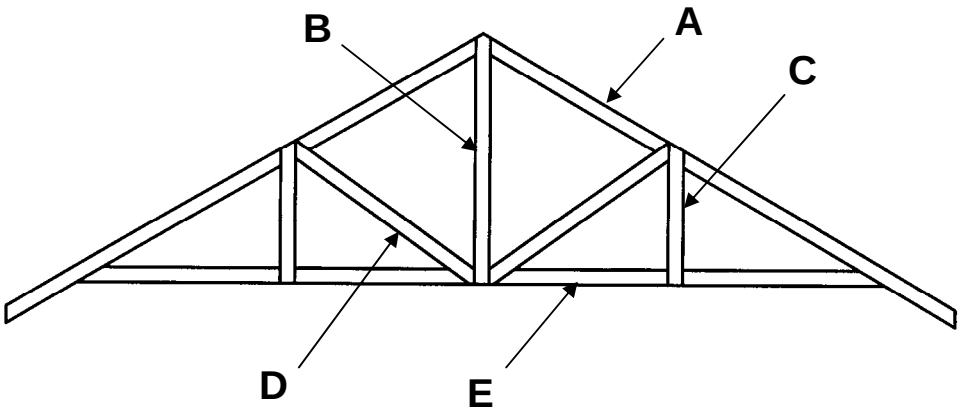

FIGURE 1.2

(5)

1.3 In the construction industry steel structures and steel roof trusses are commonly used. The different members of a steel roof truss are connected to one another by means of gusset plates. Name THREE methods that are used to connect the gusset plates to the different members of the roof truss. (3)

1.4 Describe the purpose of a batten/purlin when used for roofing purposes. (1)

1.5 You are a carpenter and joiner on site, and you are required to construct the roof trusses of a building.

1.5.1 Name TWO hand tools that you would require to make the trusses, and mention ONE important safety precaution you would observe when using each tool. (4)

1.5.2 Briefly explain THREE safety precautions that you would observe when using a power saw. (3)

1.6 What factor determines the spacing between roof trusses? (1)

1.7 Listed below are materials used in the construction of a roof.

LIST OF MATERIALS
batten; truss; ceiling board; concrete tile; brandering; plastic

Write down numbers 1.7.1 – 1.7.6 in the ANSWER BOOK and arrange the listed materials in the correct order as it will be seen on a finished roof construction, **starting** from the **outside** of the building and ending on the inside. (6)

1.8 You are a glazier on site. Name TWO materials that could be used on a timber casement to keep the window pane in place. (2)

1.9 You are on site and are administering first aid to an injured colleague who is bleeding. List THREE precautions you will take to ensure that you are not infected with any viruses or diseases, taking into account HIV/Aids. (3)

[30]

QUESTION 2: ADVANCED CONSTRUCTION PROCESSES

2.1 State TWO uses of each of the following:

2.1.1 Concrete (2)

2.1.2 Mortar (2)

2.2 Bricks are available in various sizes and shapes. Some are solid, whilst others have holes. Compare the differences between a solid brick and one with holes. State at least TWO differences. Draw a table in the ANSWER BOOK and complete it by indicating the differences as prescribed above. (4)

2.3 Dry-wall construction is commonly used in the building environment. Describe in your own words the different components and materials used for a dry-wall construction. (4)

2.4 Identify the reinforcement bars labelled A – D in FIGURE 2.4.

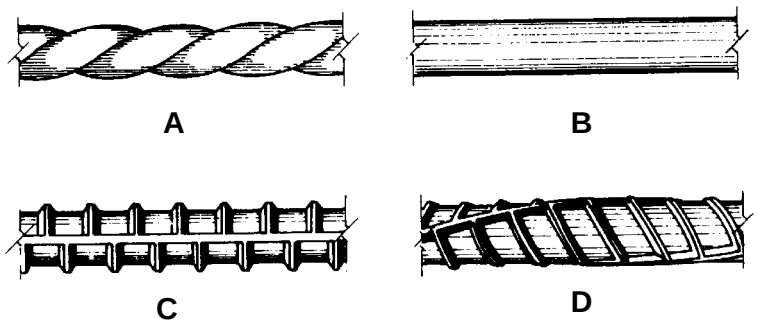

FIGURE 2.4 (4)

2.5 As a contractor you have been contracted by the local municipality to build a pedestrian bridge over a freeway that passes through a township. The reinforcement bars to be used for the columns that have to support and hold the bridge in position are 20 mm in diameter.

2.5.1 Reinforcement bars need to be covered in concrete. Give THREE reasons for this. (3)

2.5.2 What should the nominal (minimum) concrete cover be when reinforcing the beam? (2)

2.6 Distinguish between *formwork* and *shoring*. (4)

2.7 Rib and block floor slabs are becoming more popular in the building industry because of the many advantages associated with it. List FOUR material components of a rib and block floor slab. (4)

2.8 As a builder you are required to build a one-ringed semi-circular gauged arch to an entrance hall.

2.8.1 Make a two-dimensional freehand sketch of the arch and also show the brickwork supporting the arch in English bond. Label any SIX parts of the drawing. (10)

2.8.2 What will you use to support the weight of the masonry until the mortar is hard? (1)

[40]

QUESTION 3: CIVIL SERVICES

3.1 All sanitary fitments should be fitted with a trap. The trap retains a small amount of water to serve as a barrier preventing bad smells from entering the house. Recommend THREE features that a good trap should have. (3)

3.2 One of the ways in which a water trap may lose its seal is due to syphonage. What precautionary measure can be taken to prevent such a situation? (1)

3.3 Identify TWO types of traps and indicate where it could be used in a waste fitment. (4)

3.4 Extensive use is made of a rodding eye in modern waste water and drainage systems. Briefly explain the purpose of the rodding eye and the advantage of installing one. (State ONE purpose and ONE advantage.) (4)

3.5 You have to choose between a gravity and a pressure geyser for the supply of hot water to a house. Which one will you choose? Give a reason for your answer. (2)

3.6 Water is heated for consumption by households for various reasons. To have a ready supply of heated water, it is essential to install an electric water heater. Explain how a solar or electric geyser operates. (4)

3.7 3.7.1 State TWO advantages of a solar geyser. (2)

3.7.2 State ONE disadvantage of a solar geyser. (1)

3.8 Explain why it is not advisable to discharge waste water into a septic tank system? (1)

3.9 There have been many power supply cuts to most parts of our country recently. This has been mainly due to the excessive use of electricity in our homes. Recommend TWO possible ways in which a consumer could reduce electricity consumption in a home. (4)

3.10 What is the purpose of a grease trap and where will you install one? (2)

3.11 Mankind is dependent on a supply of fresh water for survival. In the absence of piped water from the municipality, suggest TWO sources that supply fresh water that may be consumed by humans. (2)

[30]

QUESTION 4: MATERIALS

4.1 Various possible options are provided as answers to the following questions. Choose the answer and write only the letter (A – D) next to the question number (4.1.1 – 4.1.5) in the ANSWER BOOK, for example 4.1.6 D.

4.1.1 When concrete is poured, it needs to be compacted in order to ...

A smooth the surface.
B gain maximum density.
C cause segregation.
D hydrate properly. (1)

4.1.2 When cement and water come into contact with one another, a chemical reaction takes place. This chemical reaction is called ...

A curing.
B hyperventilation.
C compaction.
D hydration. (1)

4.1.3 This test is used to test the consistency of the mix of different batches of concrete:

A Stick test
B Slump test
C Combustion test
D Sample test (1)

4.1.4 The cube test is conducted to test ...

A uneven colour in the concrete.
B the stiffness of the concrete.
C the dispersal of aggregates in the concrete.
D the compressive strength of the concrete. (1)

4.1.5 When timber boards are used to finish the verge of a gable end roof, they are called ...

A fascia boards.
B barge boards.
C ceiling boards.
D soffit boards. (1)

4.2 A number of different types of materials are available for the supply of fresh water to a house. Redraw the table below in the ANSWER BOOK and complete it by stating ONE advantage and ONE disadvantage of the given water supply materials to a dwelling.

MATERIAL	ADVANTAGE	DISADVANTAGE
Galvanised pipes		
Copper pipes		
Plastic pipes		

(6)

4.3 You have to cast a concrete floor. Give TWO reasons why you would prefer to use ready mixed concrete. (2)

4.4 Concrete is extensively used in civil engineering because of its many excellent properties. List THREE properties of reinforced concrete. (3)

4.5 It has been reported in the media that some reinforced concrete structures have collapsed (failed). List THREE possible factors that could give rise to structural failure in concrete. (3)

4.6 Timber is graded before it is used in the building industry. What are the TWO methods used to grade timber? (2)

4.7 A variety of timbers are used in the building industry. Redraw the table below in the ANSWER BOOK and complete it by filling in ONE property and ONE use of the given timber as used in the construction of a house.

TIMBER	PROPERTY	USE
SA pine		
Meranti		

(4)

4.8 FIGURE 4.8 represents a drawing of the sub-structure of a strong room in your Civil Technology centre.

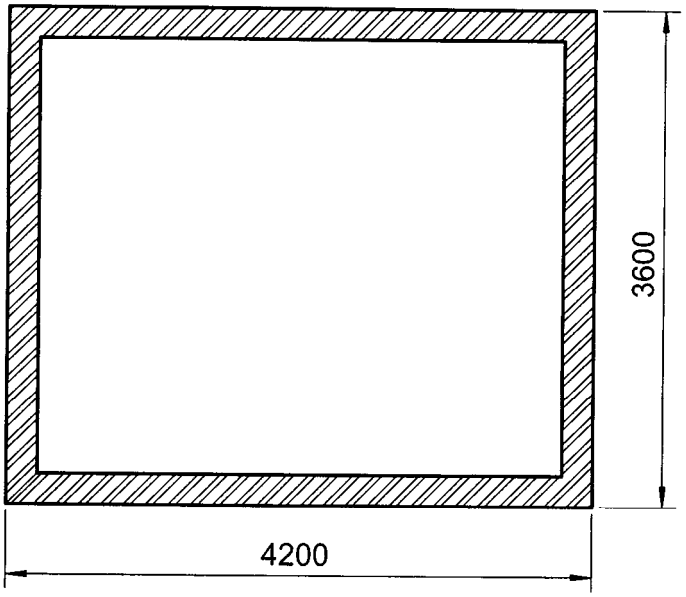

FIGURE 4.8

Use ANSWER SHEET 4.8 and calculate the quantity of tiles you would require to tile the floor. The size of the tiles is 300 mm x 300 mm. (5)
[30]

(ANY METHOD OF CALCULATION WILL BE ACCEPTABLE)

QUESTION 5: APPLIED MECHANICS

5.1 FIGURE 5.1 shows a simply supported beam with a uniformly distributed load (UDL) spread across the entire beam. Draw only a representation of the following:

5.1.1 Shear force diagram (NO calculations needed) (3)

5.1.2 Bending moment diagram (NO calculations needed) (1)

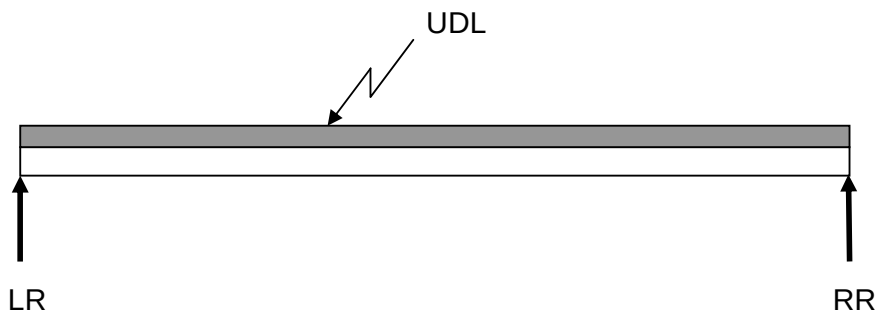

FIGURE 5.1

5.2 FIGURE 5.2 below shows the design of a roof truss that has to be placed on a newly-built structure.

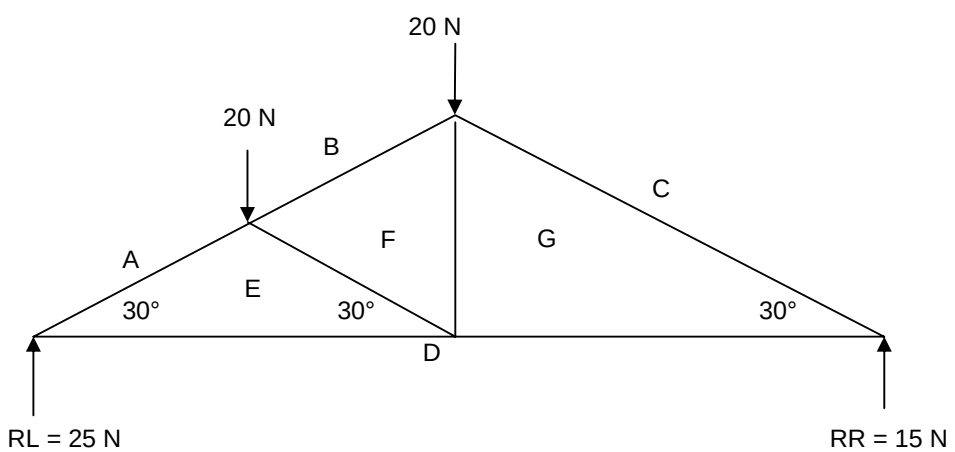

FIGURE 5.2

5.2.1 Determine graphically the magnitude and nature of the forces in the structure. Use ANSWER SHEET 5.2.1.
(Use a scale of 3 mm = 1 N) (6)

5.2.2 Complete the table below on ANSWER SHEET 5.2.2.

MEMBER	MAGNITUDE	NATURE
AE		
BF		
CG		
DE		
DG		
EF		
FG		

(14)

5.3 FIGURE 5.3 shows the lamina of a pyramid.

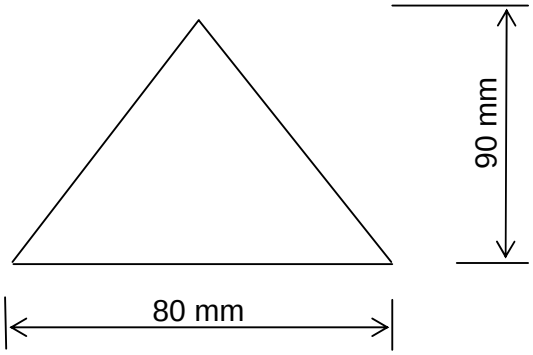

FIGURE 5.3

5.3.1 Calculate the area of the lamina. (2)

5.3.2 Determine by means of calculations the position of the centroid from the following:

(a) Bottom (2)
(b) Right-hand side (2)

[30]

QUESTION 6: GRAPHICS AND COMMUNICATION

ANSWER THIS QUESTION ON THE ATTACHED ANSWER SHEETS.

In your school there is a need to build a storeroom for Civil Technology equipment. As an aspiring draughtsman you are required to produce the working drawings for a two-roomed storeroom building.

NOTES:

- The building should have one external entrance as a roll-up door. This door must be fitted in room 2 (see specifications below).
- The entrance to the building must be facing south. A ramp must be built to allow access for a vehicle.
- Access from one room to the other is through an inter-leading door built into a half-brick wall.
- The structure is built with 220 mm x 110 mm x 75 mm face bricks.
- The roof must be a lean-to roof sloping downward from south to north.
- Parapet walls three courses above the roof.
- The window in room 1 must be 1 500 mm x 900 mm and must face south.
- The window in room 2 must be 2 000 mm x 600 mm and must face east.

SPECIFICATIONS:

- Internal measurements: Room 1 – 4 000 mm x 3 000 mm
  Room 2 – 4 000 mm x 5 500 mm

- Door opening 1: 2 400 mm x 2 100 mm
  Door opening 2: 810 mm x 2 100 mm

- Windows: W1 – 1 500 mm x 900 mm (facing south)
  W2 – 2 000 mm x 600 mm (facing east)

- Roof:
  - Pitch 15º - The highest side of the roof must be on the same side as the entrance roll-up door.
  - Corrugated iron sheeting must be used for the roof covering.
  - Rafters – 114 mm x 38 mm
  - Purlins – 50 mm x 76 mm
  - Wall plate – 114 mm x 38 mm
  - 100 mm diameter gutter and down pipes

6.1 Using a scale of 1:100, design and draw the floor plan of the storeroom required on ANSWER SHEET 6.1. Dimension your drawing. (20)

6.2 Draw to a scale 1:100 the south elevation of the storeroom on ANSWER SHEET 6.2. (10)

6.3 Draw to a scale 1:50 a vertical section through the building as seen from the western side on ANSWER SHEET 6.3. Show ONLY the roof construction and top part of the external walls. (10)

[40]

TOTAL: 200

Copyright reserved

EXAMINATION NUMBER: | | | | | | | | | | | | | |

QUESTION 4.8

ANSWER SHEET 4.8

A	B	C	D

(5)

EXAMINATION NUMBER: | | | | | | | | | | | | | |

QUESTION 5.2.1

ANSWER SHEET 5.2.1

a

(6)

EXAMINATION NUMBER: | | | | | | | | | | | | | |

QUESTION 5.2.2

ANSWER SHEET 5.2.2

MEMBER	MAGNITUDE	NATURE
AE		
BF		
CG		
DE		
DG		
EF		
FG		

(14)

EXAMINATION NUMBER: | | | | | | | | | | | | | |

QUESTION 6.1

ANSWER SHEET 6.1

EXAMINATION NUMBER: | | | | | | | | | | | | | |

QUESTION 6.2

ANSWER SHEET 6.2

EXAMINATION NUMBER: | | | | | | | | | | | | | |

QUESTION 6.3

ANSWER SHEET 6.3

Copyright reserved

FORMULA SHEET

IMPORTANT ABBREVIATIONS

SYMBOL	DESCRIPTION	SYMBOL	DESCRIPTION	SYMBOL	DESCRIPTION
G	Centre of gravity	h	Height	d	Diameter
C	Centroid	b	Breadth/Width	r	Radius
L	Length	s	Side	A	Area
$\prod$	Pi = $\frac{22}{7}$ = 3,142	Ø	Diameter	V	Volume

FORMULAE

AREA OF	FORMULA (in words)	FORMULA (in symbols)	FORMULA FOR THE POSITION OF CENTROIDS	
			X-axis	Y-axis
Square	Length x Breadth	l x b	$\frac{b}{2}$	$\frac{b}{2}$
Rectangle	Length x Breadth	l x b	$\frac{l}{2}$	$\frac{b}{2}$
Right-angled triangle	½ x base x height	½b x h	$\frac{b}{3}$	$\frac{h}{3}$
Equilateral triangle/Pyramid	½ x base x height	½b x h	$\frac{b}{2}$	$\frac{h}{3}$
Circle	$\prod$ x radius x radius	$\prod r^2$	Centroid is in the centre	
Circle	$\prod$ x diameter x diameter divided by 4	$\frac{\prod d^2}{4}$		
Semi-circle	$\prod$ x radius x radius divided by 2	$\frac{\prod r^2}{2}$	Centroid is 0,424r on the centre line	

$$\text{Position of centroid} = \frac{(A1 \times d) + (A2 \times d)}{\text{Total area}}$$

Copyright reserved