GAUTENG DEPARTMENT OF EDUCATION

PREPARATORY EXAMINATION

2010

10641

AGRICULTURAL SCIENCES

First Paper

12 pages and an answer sheet

MARKS: 150
TIME: 2½ HOURS

COPYRIGHT RESERVED

INSTRUCTIONS AND INFORMATION

1. Answer ALL the questions.
2. SECTION A (Question 1) must be answered on the attached ANSWER SHEET. Place the completed answer sheet inside the front cover of your answer book.
3. SECTION B (Question 2 to 4) must be answered in the ANSWER BOOK.
4. Begin each question in SECTION B on a NEW page.
5. Read ALL the questions carefully and answer only what is asked.
6. Number the answers correctly according to the numbering system used in this question paper.
7. Write neatly and legibly.

Copyright reserved

SECTION A

QUESTION 1

1.1 Various options are given as possible answers to the following questions. Select the correct answer by making a cross in the block (A – D) next to the corresponding number (1.1.1. - 1.1.10) on the ANSWER SHEET.

1.1.1 The process where a large number of ripe ova are released for fertilisation is known as ...

A mummification.
B maceration.
C superovulation.
D superfoetation.

1.1.2 The micro-organism in the rumen of the ruminant requires ... for the synthesis of vitamin B_{12}.

A cobalt
B zinc
C potassium
D phosphorus

1.1.3 Refer to the structure below. Which numbered part indicates mitochondria?

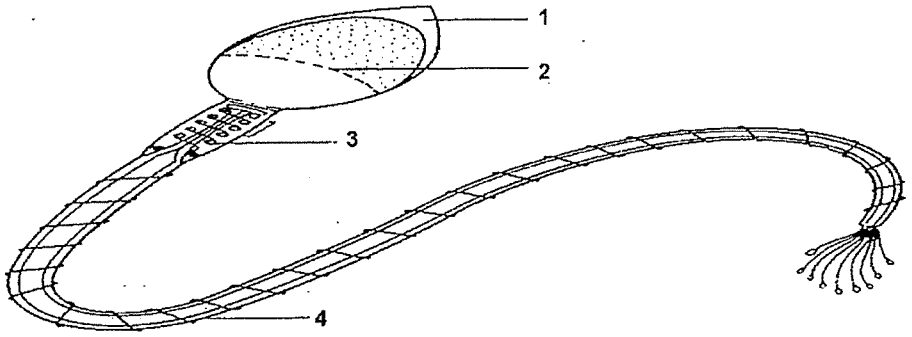

A 2
B 3
C 4
D 1

1.1.4 The part of the cow that produces milk and is divided into four parts.

A Udder
B Gland cavity
C Hindquarters
D Alveoli

1.1.5 Body temperature is measured by inserting a thermometer into the animal's ...

A belly.
B tail.
C neck.
D rectum.

1.1.6 Substances that animals need for normal growth and production that are lacking from their ration and need to be added.

A Concentrates
B Roughages
C Supplements
D Free water

1.1.7 ... is/are an example of a feed that contains a large volume per unit mass and is bulky.

A Hay
B Fishmeal
C Mineral licks
D Bone meal

1.1.8 A structure which is provided to protect the animals from extreme climatic conditions and provide shade is called a ...

A homestead.
B shelter.
C abattoir.
D ventilation.

1.1.9 ... is an instrument to cut the ducts that carry the spermatozoa from the testes to the penis.

A Castration
B Burdizzo
C Emasculator
D Rubber ring

Copyright reserved

1.1.10 One of the following is an animal parasite which affects animals.

A Tsetse fly
B Flukes
C Ticks
D Flies

(10x2) (20)

1.2 In the table below a description and two possible answers are given. Choose whether the description in COLUMN B relates to A only, B only, both A and B or NONE of the answers in COLUMN A and make a cross (X) on the answer sheet.

Example:

Column A		Column B
A	Blood slides	Measurements used to determine the health status of the animals.
B	Hormones	

Answer:

The description refers to:			
Only A	Only B	A and B	None
~~A~~	B	C	D

	Column A		Column B
1.2.1	A	Lack of libido	One factor that leads to infertility
	B	Ejaculation	
1.2.2	A	Cannibalism	Animal behaviour caused by stress
	B	Standstill	
1.2.3	A	Red-legged tick	Causes sweating sickness
	B	Brown-ear tick	
1.2.4	A	Pearson square method	System to determine nutritional value of a feed mixture
	B	Fodder flow programme	
1.2.5	A	Zero grazing	Management of feeding of animals
	B	Grazing camps	

(5x2) (10)

Copyright reserved

1.3 Give ONE term/phrase for each of the following descriptions. Write only the term/phrase next to the question number on the ANSWER SHEET provided.

1.3.1 The process when the ripe ovum is released in the infundibulum of the Fallopian tube.

1.3.2 The period when an animal needs to build up her reserves for the second lactation.

1.3.3 An endocrine gland which secretes the hormones insulin and glucagon.

1.3.4 The system of moving animals between different grazing camps so as to control the veld objectively.

1.3.5 The process where the livestock are injected with the substance that prevents them from contracting disease.

(5x2) (10)

1.4 The following statements are FALSE. Change the UNDERLINED WORD/ WORDS in each of the following statements to make them TRUE. Write the appropriate word/words next to the question number (1.4.1 – 1.4.5) on the ANSWER SHEET provided.

1.4.1 Shade cloth structures are used on a farm to provide the <u>workers</u> with shade.

1.4.2 <u>Docking</u> is the system used to prevent the growth of horns.

1.4.3 <u>Artificial insemination</u> treats a large number of animals with hormones to change their oestrus cycle so that all will reach oestrus within the same period.

1.4.4 The <u>cloaca</u> is a sac-like appendix situated between the ileum and the colon.

1.4.5 <u>Calves</u> are piglets which have just been weaned from the sow.

(5x1) (5)

TOTAL SECTION A: 45

Copyright reserved

SECTION B

BEGIN THIS QUESTION ON A NEW PAGE.

QUESTION 2: ANIMAL NUTRITION

2.1 Refer to the structure of the alimentary canal of a farm animal below and answer the questions based on the structure.

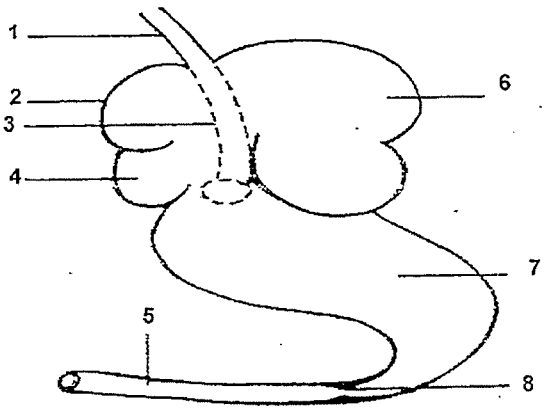

2.1.1 Provide the name of the farm animal that has a digestive tract of this kind. Motivate your answer with TWO reasons. (3)

2.1.2 Write down the number of the part where the reabsorption of water occurs and describe what this part looks like. (2)

2.1.3 There are finger-like projections in the part numbered 6 which act as 'heating rods'. Give the name of the structure. (1)

2.1.4 List the names of the following parts: 1, 4, 5 and 8, in the diagram above. (4)

2.1.5 Recommend in the context of Agricultural Sciences the part number which is regarded as the glandular stomach. (1)

2.1.6 Briefly explain how feed containing cellulose is digested in the parts labelled 2 and 6. (5)

Copyright reserved

2.2 The animals illustrated below exhibit a particular deficiency, which is a result of a shortage of nutrients in their bodies.

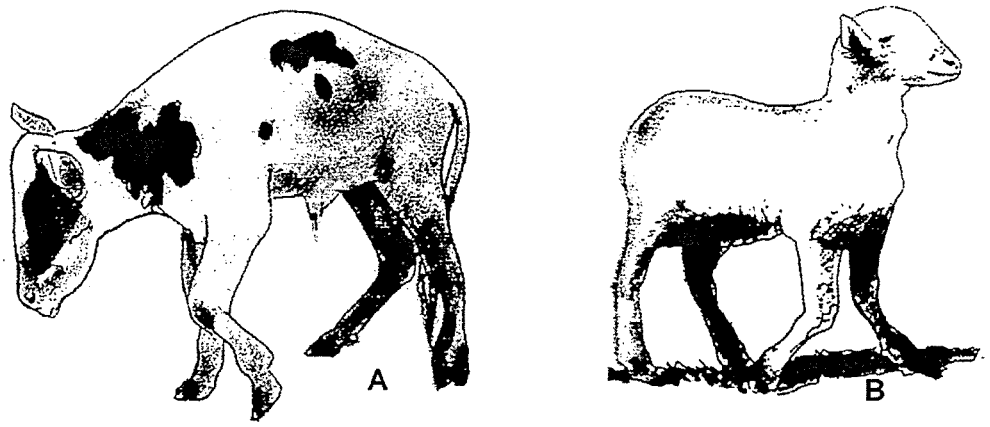

2.2.1 Identify the deficiency and give ONE example of each of the two conditions (A and B) and say how a farmer can avoid each particular deficiency. (4)

2.2.2 Referring to the figure in QUESTION 2.2, explain the significance of proteins regarding these animals. (2)

2.2.3 Name TWO factors that can determine the digestibility of feeds in these animals. (2)

2.3 Nutritive ratio is an "indicator of the protein content of a feed" (adapted from *Focus, 2007*). Read this information regarding the nutritive ratio and answer the questions that follow:

A feed sample contains 80% total digestible nutrients (TDN) and 20% digestible proteins (DP).

2.3.1 Calculate the nutritive ratio (NR) of the feed sample. (3)

2.3.2 Suggest whether this is a wide or narrow nutritive ratio. (1)

2.3.3 Explain your answer in QUESTION 2.3.2. (1)

2.4 Distinguish between the following concepts:

2.4.1 Roughages and (2)
2.4.2 Concentrates (2)

2.5 Describe any TWO ways in which minerals can be supplied to farm animals. (2)

[35]

BEGIN THIS QUESTION ON A NEW PAGE.

QUESTION 3: ANIMAL PRODUCTION

3.1 Indigenous agriculture still plays a role in South Africa. Concepts like lobola and subsistence farming were some of the practices that occurred in the South African agriculture and are still being practised today.

3.1.1 Briefly explain the following concepts:

3.1.1.1 Lobola (2)
3.1.1.2 Subsistence farming. (2)

3.2 Distinguish between:

3.2.1 Extensive production and (2)
3.2.2 Intensive production (2)

3.3 Indicate whether lucerne-hay is suitable for the purpose of:

3.3.1 energy (1)
3.3.2 production (1)
3.3.3 growth (1)
3.3.4 fattening. (1)

3.4 Mention FIVE types of equipment used in handling of large farm animals. (5)

3.5 Explain THREE factors that could influence the behaviour of farm animals. (3)

3.6 Livestock cannot move on their own to different types of veld for grazing or to the abattoir for the market. This implies that they need to be under the control of either a human being or guard dogs, or be transported to their destination.

Give FOUR requirements for the movement or transport of animals to the grazing veld or abattoir. (4)

Copyright reserved

3.7 Refer to the types of feeds and the table below, which indicates the different types and ages of chickens. Classify the type of feeds relevant to the type and age of the chickens, e.g. 3.7.5 D.

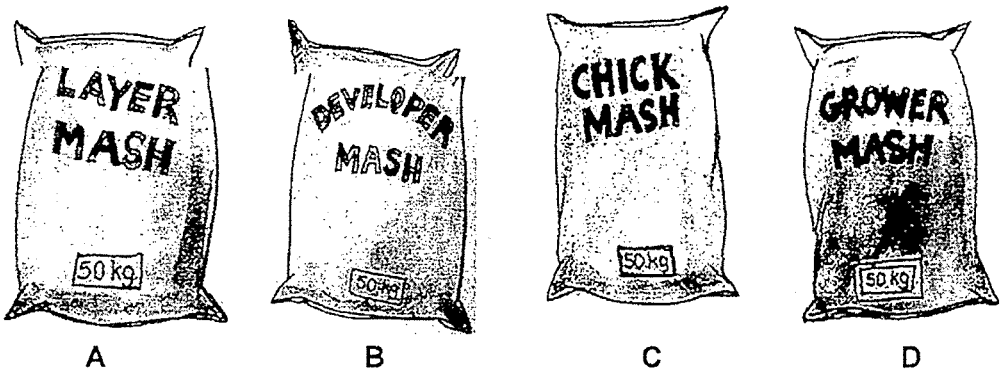

Type and age of chicken		Type of feed
3.7.1	Day-old to 6 weeks	
3.7.2	6 to 12 weeks	
3.7.3	12 weeks to point of lay	
3.7.4	Egg-laying period	

(4)

3.8 Discuss how farm animals protect themselves naturally under unfavourable conditions. (5)

3.9 Cross-breeding is applied to a number of animal breeding enterprises, for example cattle, sheep, pigs.

Name TWO advantages of cross-breeding in the farming enterprise. (2)

[35]

BEGIN THIS QUESTION ON A NEW PAGE.

QUESTION 4: ANIMAL REPRODUCTION, PROTECTION AND CONTROL

4.1 Agriculture is one of the most important business sectors in the country and also globally. It only becomes successful if the produce is good and without any disturbance. Bulls as part of the production factor must bring a good production in the fertilisation of cows.

4.1.1 Explain the concept *spermatogenesis*. (2)

4.1.2 Design a simple labelled diagram of spermatogenesis. (5)

4.2 Study the picture and answer the questions that follow.

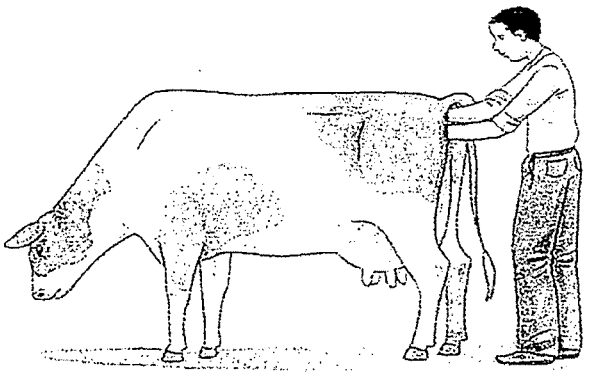

4.2.1 What does this picture illustrate? (1)

4.2.2 Describe the first FOUR steps to be followed when this technique is performed. (4)

4.2.3 State TWO benefits of using this technique. (2)

4.3 The development of an embryo into a foetus takes place in three phases. The development of the first phase is shown below with some concepts which describe them.

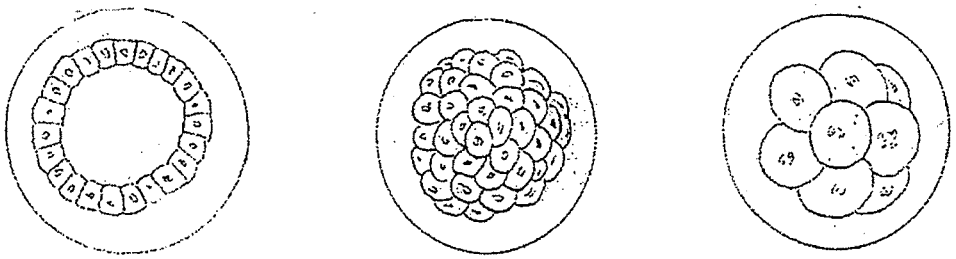

A B C

4.3.1 Zygote (8 cell)
4.3.2 Blastocoel
4.3.3 Morula (3)

Write next to the number of each concept the letter of the corresponding picture e.g 4.3.4 Zygote (2 cell) – E

4.4 Study the information on bacterial diseases in the table below.
Write down the missing word/words as shown by the numbers.

BACTERIAL DISEASE	ANIMAL HOST	SYMPTOMS	TREATMENT
Mastitis	A ...	(i) ...	Antibiotics inserted into udder of the cow
B ...	cattle; pigs; sheep; goats	(ii) ...	This is a notifiable disease. Vaccination
Tetanus	(iii) ...	Stiffness of muscles; walks with stiff legs and jaws are locked together	Treat wounds and inject medication and a tranquilliser.

(5)

4.5 As a learner in a Grade 12 class doing Agricultural Sciences, you are requested by the government of your province to conduct a research on the health of animals on 15 farms. You are required to compile a list of:

4.5.1 General signs of poor health in animals. (3)

4.5.2 General signs of good health in animals. (3)

4.6 Environmental factors can be very harmful to livestock, particularly when the temperature is very high or very low. These conditions may have a negative impact on the production expected from farm animals, in particular dairy cows, as they produce milk every day.

Explain FOUR ways how farmers could protect their animals against hot conditions. (4)

4.7 Give THREE examples of roundworms. (3)

[35]

TOTAL SECTION B: 105

GRAND TOTAL: 150

Copyright reserved

ANSWER SHEET

NAME/EXAMINATION NUMBER:_____

SECTION A

QUESTION 1.1

1.1.1	A	B	C	D
1.1.2	A	B	C	D
1.1.3	A	B	C	D
1.1.4	A	B	C	D
1.1.5	A	B	C	D
1.1.6	A	B	C	D
1.1.7	A	B	C	D
1.1.8	A	B	C	D
1.1.9	A	B	C	D
1.1.10	A	B	C	D

(10x2) (20)

QUESTION 1.3

1.3.1 _____

1.3.2 _____

1.3.3 _____

1.3.4 _____

1.3.5 _____

(5x2) (10)

QUESTION 1.2

	Only A	Only B	A and B	None
1.2.1				
1.2.2				
1.2.3				
1.2.4				
1.2.5				

(5x2) (10)

QUESTION 1.4

1.4.1 _____

1.4.2 _____

1.4.3 _____

1.4.4 _____

1.4.5 _____

(5x1) (5)

TOTAL SECTION A: 45

Copyright reserved